rexroth
A Bosch Company

Special cavities

RE 18325-75/12.22
Replaces: 11.22

004 - 008 - 009 - 065 - 308 - 348 - 690 - 730 - 730-A
808 - 869 - 870 - 871 - 924 - CA-07A-3N - CA-04A-3Y
CA-04A-2N - CA-16A-5C - CA-20B-6C - 017-E - 019-E
021-E - 076-E - 081-E - FB - FC - LG - CA-10A-5N
HYDAC 06020 - 1004 - R/MH2FR04K - R/LA - YHC
YHK - FK - R/T-08A - LM - 039-E - 040-E

Summary

Description	Page
Cavity 004	2
Cavity 008	2
Cavity 009	2
Cavity 065	2
Cavity 348	2
Cavity 690	2
Cavity 730	3
Cavity 730-A	3
Cavity 808	3
Cavity 869	3
Cavity 870	3
Cavity 871	3
Cavity 924	4
Cavity CA-07A-3N	4
Cavity CA-04A-3Y	4
Cavity CA-04A-2N	4
Cavity 308	4
Cavity CA-20B-6C	5
Cavity 017-E	6
Cavity 019-E	6
Cavity 021-E	6
Cavity 076-E	6
Cavity 081-E	6
Cavity CA-16A-5C	7
Cavity FB	8
Cavity FC	9
Cavity LG	10
Cavity CA-10A-5N	11
Cavity Hydac 06020	12
Cavity 1004	13
Cavity R/MH2FR04K	14
Cavity R/LA	15
Cavity YHC	16
Cavity YHK	17
Cavity FK	18
Cavity R/T-08A	19
Cavity LM	20
Cavity 039-E	21
Cavity 040-E	22

Special cavity 004

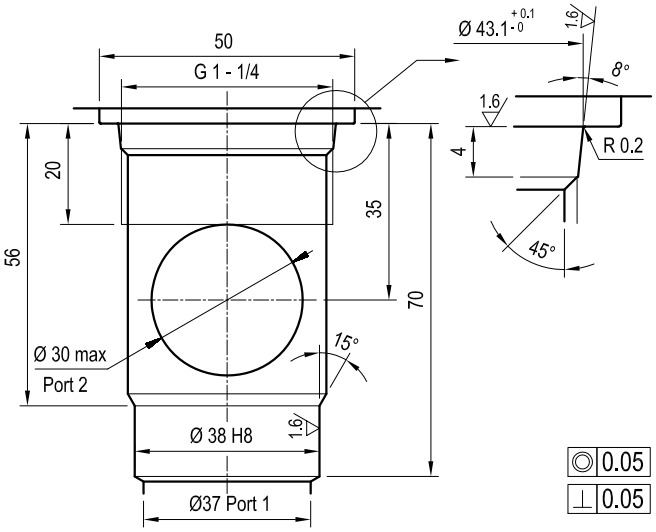

Special cavity 008

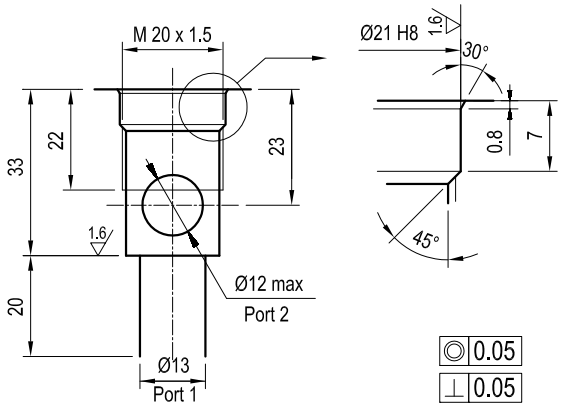

Special cavity 009

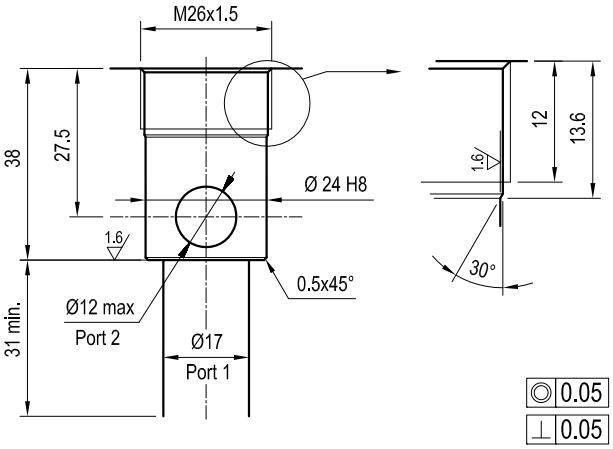

Special cavity 065

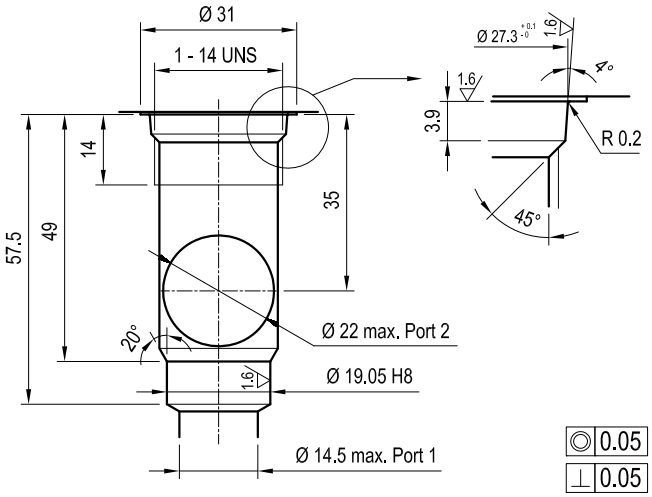

Special cavity 348

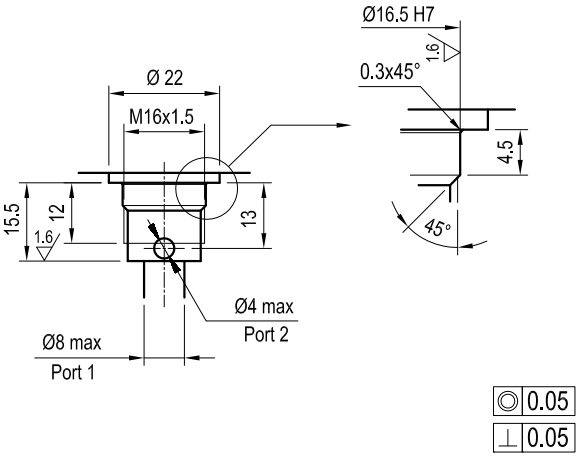

Special cavity 690

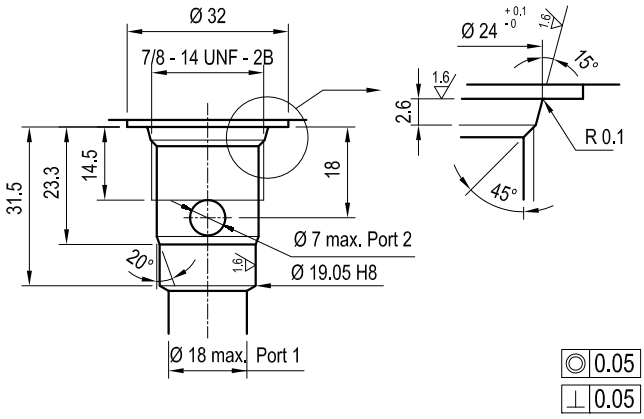

1 mm = 0.03937 in
1 in = 25.4 mm

Note: For further details please consult factory

Special cavity 730

1 mm = 0.03937 in
1 in = 25.4 mm

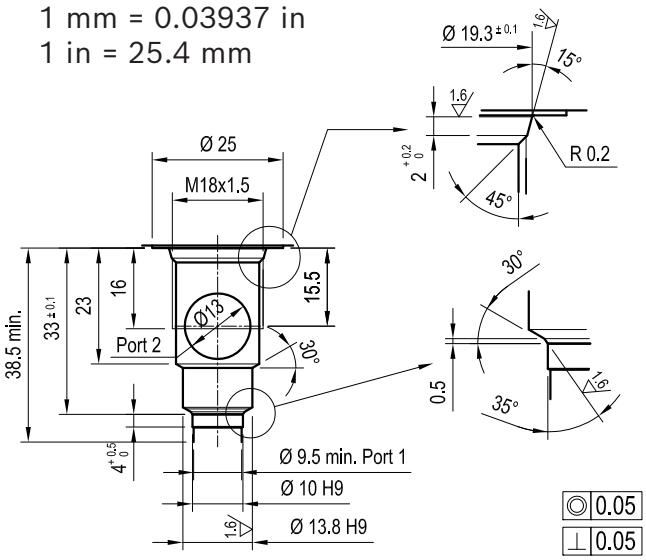

Special cavity 730-A

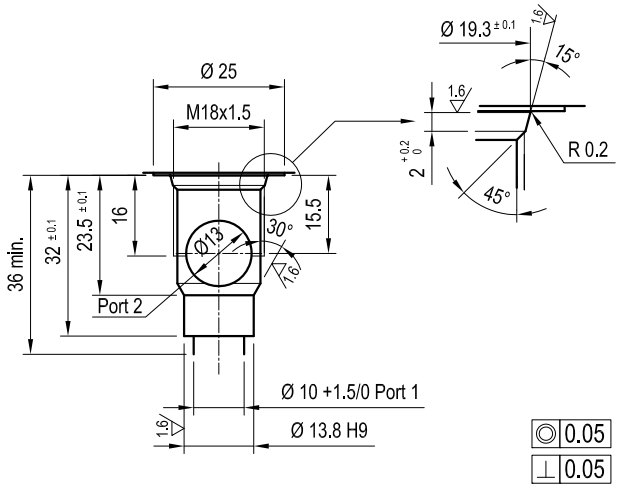

Special cavity 808

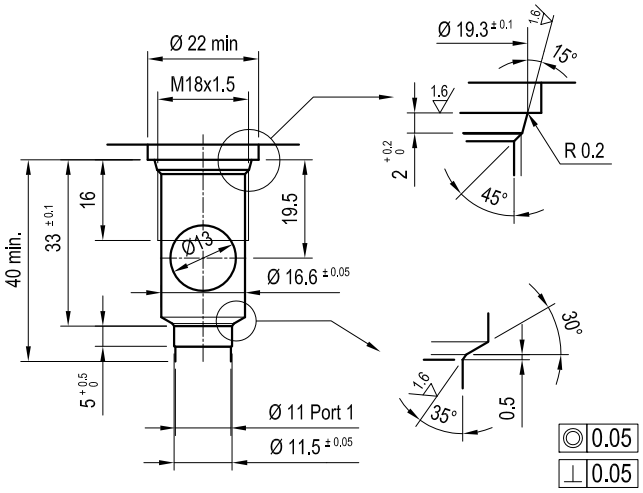

Special cavity 869

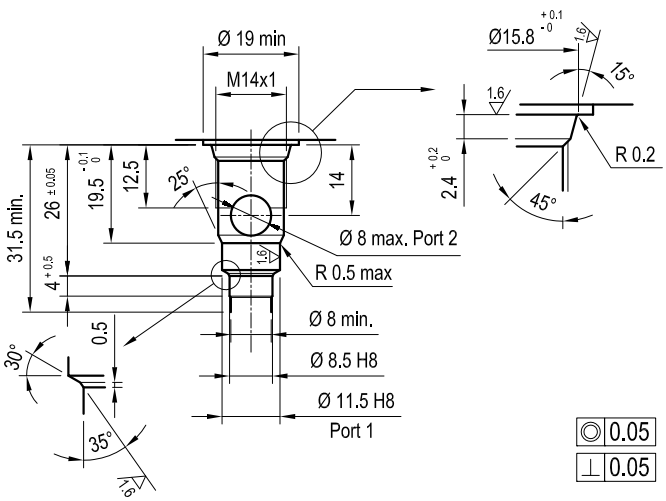

Special cavity 870

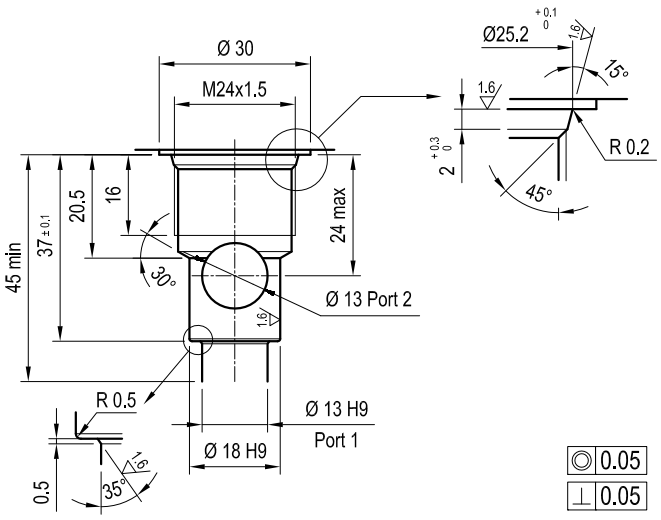

Special cavity 871

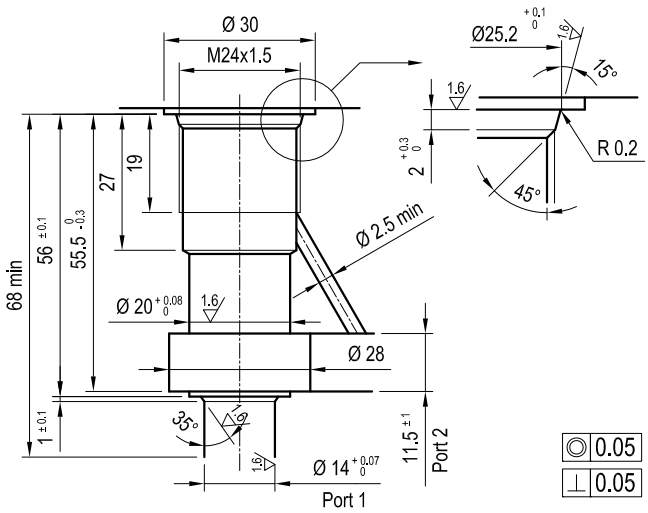

Note: For further details please consult factory

Special cavity 924

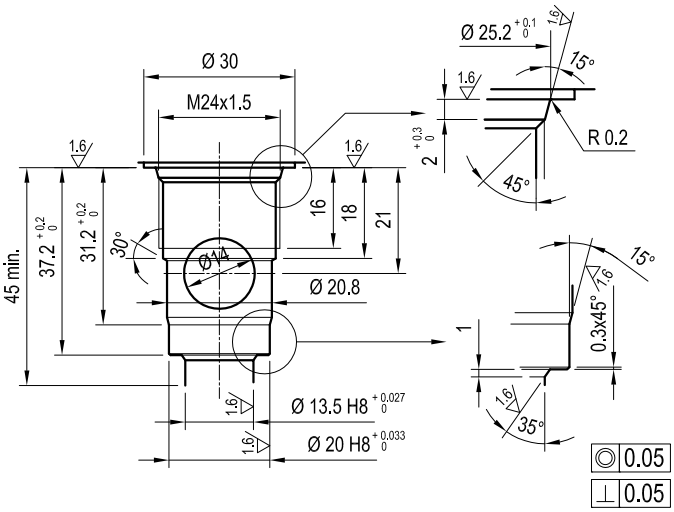

Special cavity CA-07A-3N

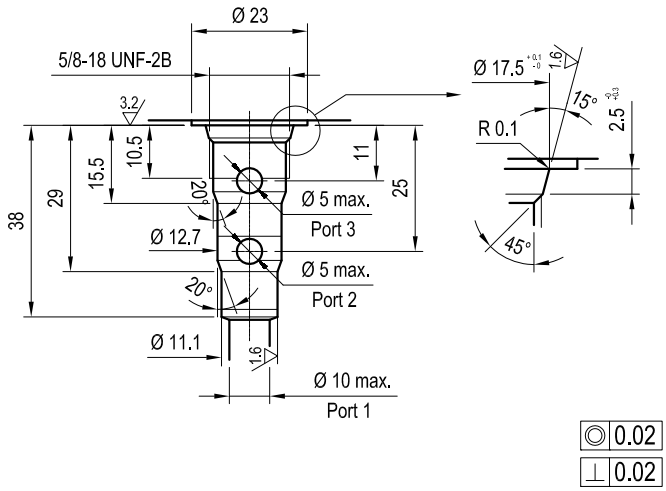

Special cavity CA-04A-3Y

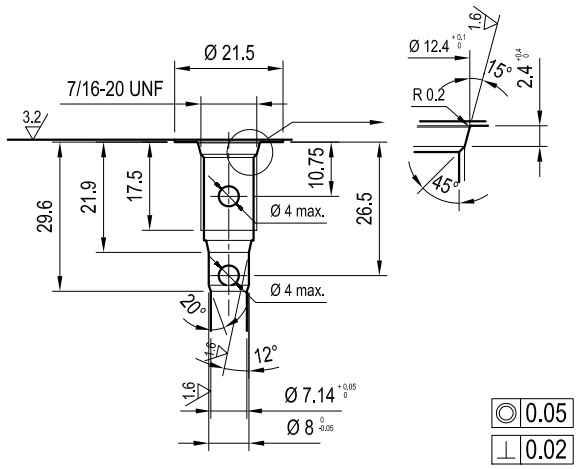

Special cavity 308

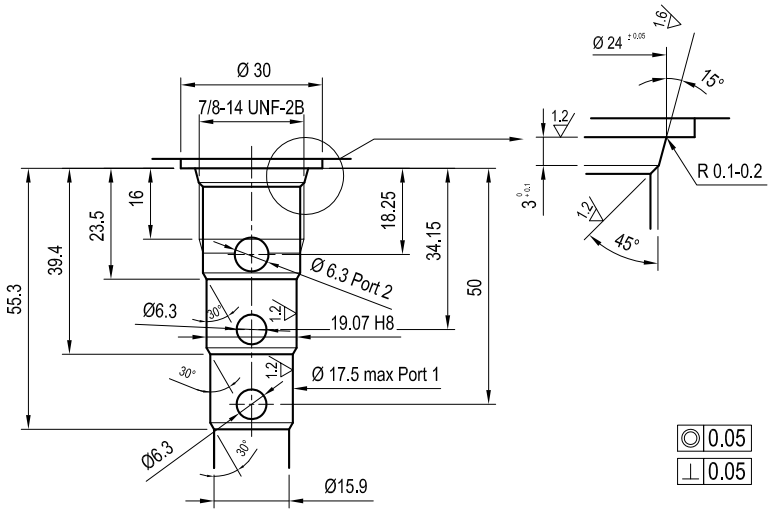

Special cavity CA-04A-2N

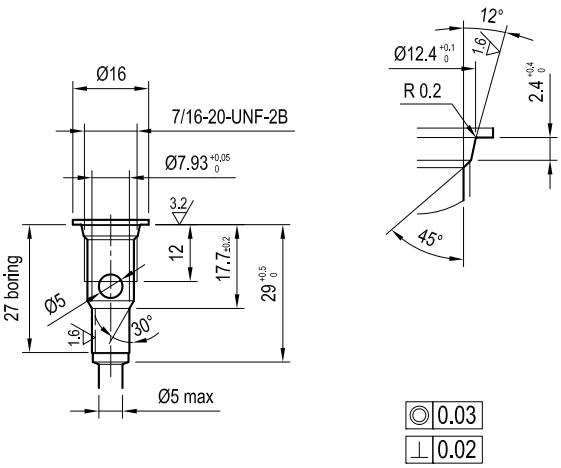

Note: For further details please consult factory

1 mm = 0.03937 in
1 in = 25.4 mm

Special cavity CA-20B-6C

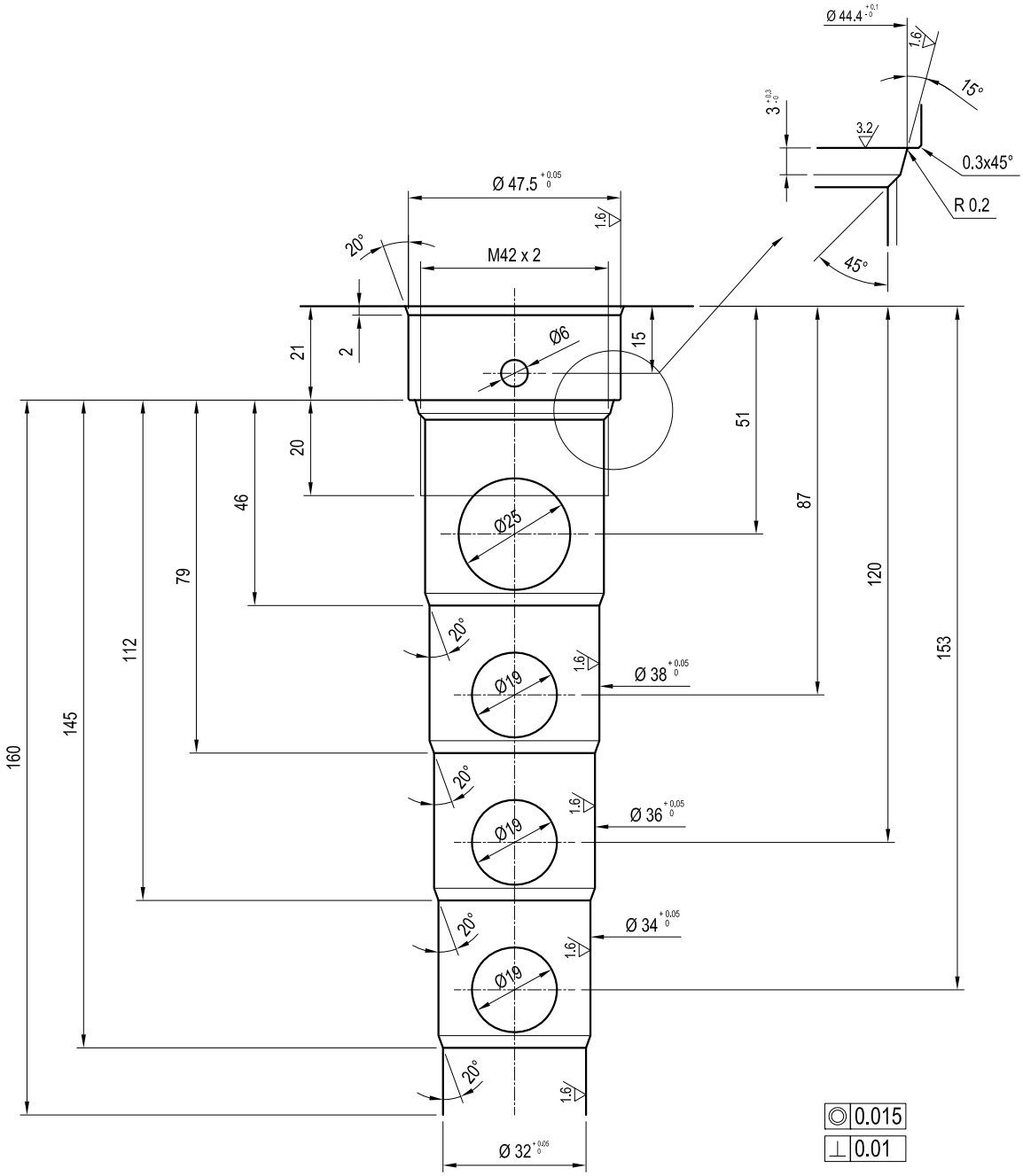

Note: For further details please consult factory

1 mm = 0.03937 in
1 in = 25.4 mm

Special cavity 017-E

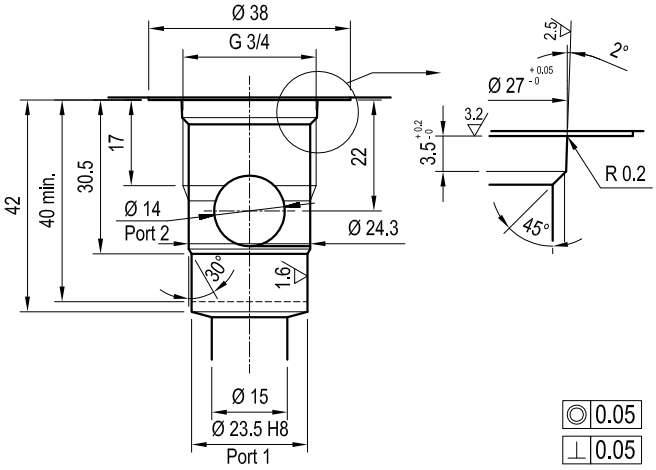

Special cavity 019-E

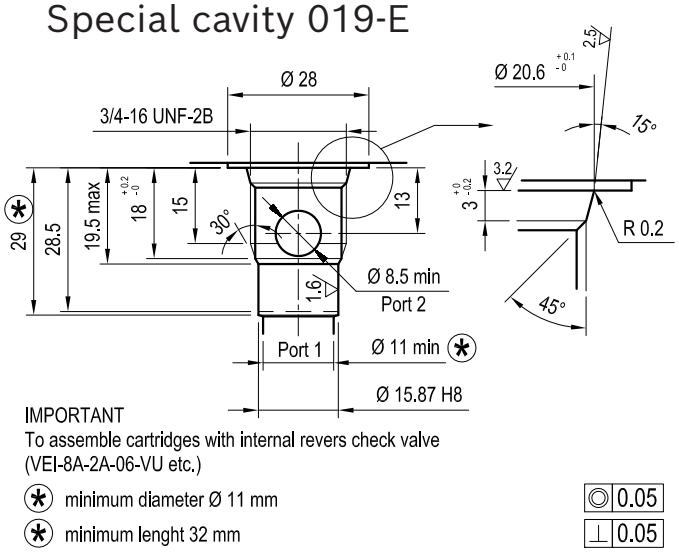

Special cavity 021-E

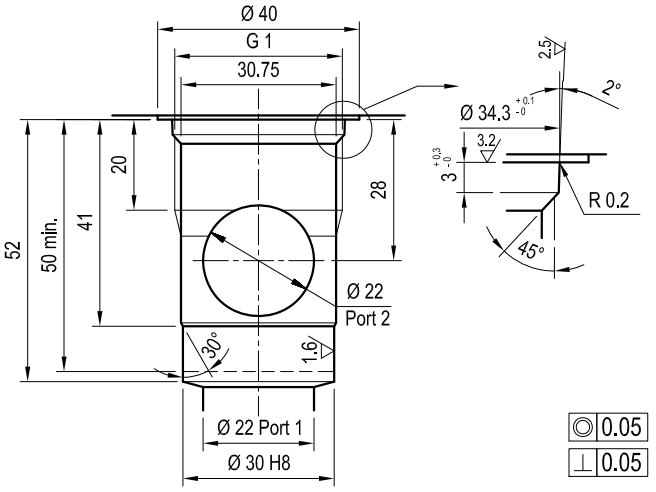

Special cavity 076-E

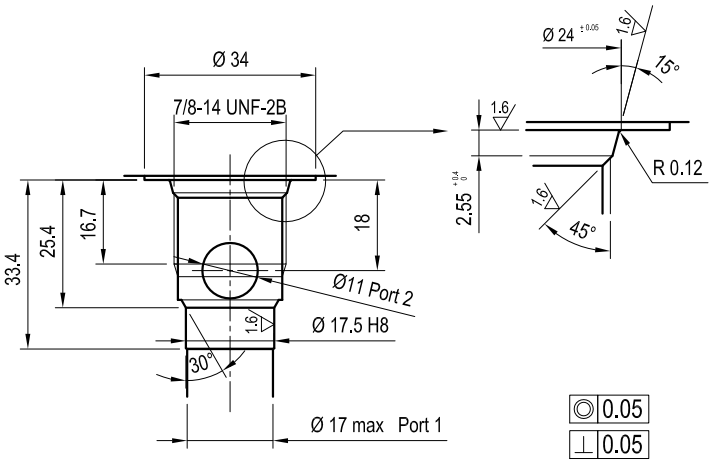

Special cavity 081-E

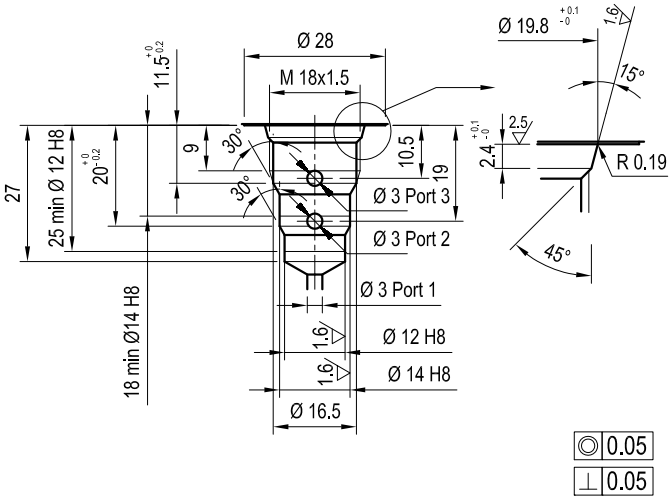

1 mm = 0.03937 in
1 in = 25.4 mm

Note: For further details please consult factory

Special cavity CA-16A-5C

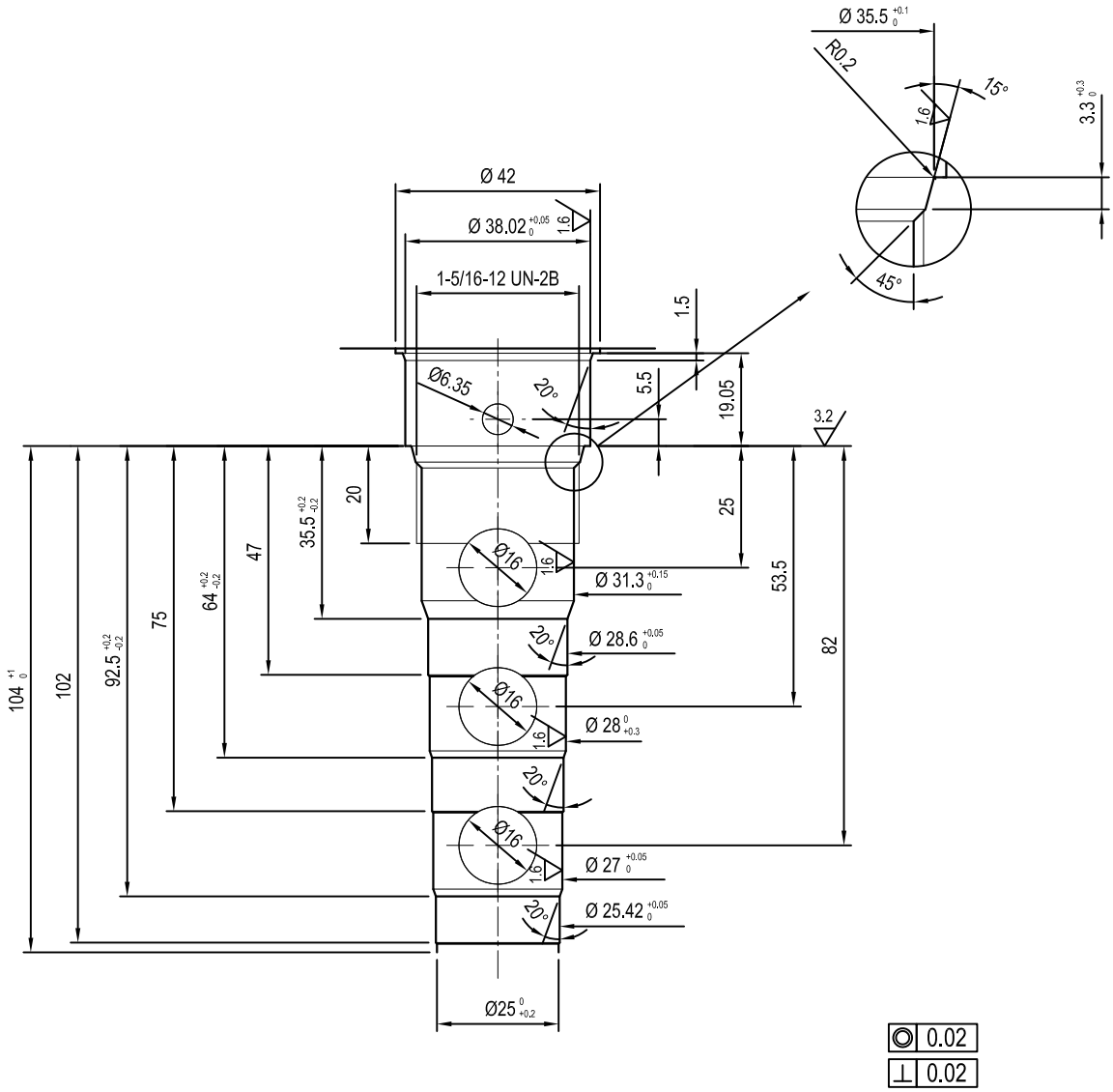

1 mm = 0.03937 in
1 in = 25.4 mm

Note: For further details please consult factory

Special cavity FB

1 mm = 0.03937 in
1 in = 25.4 mm

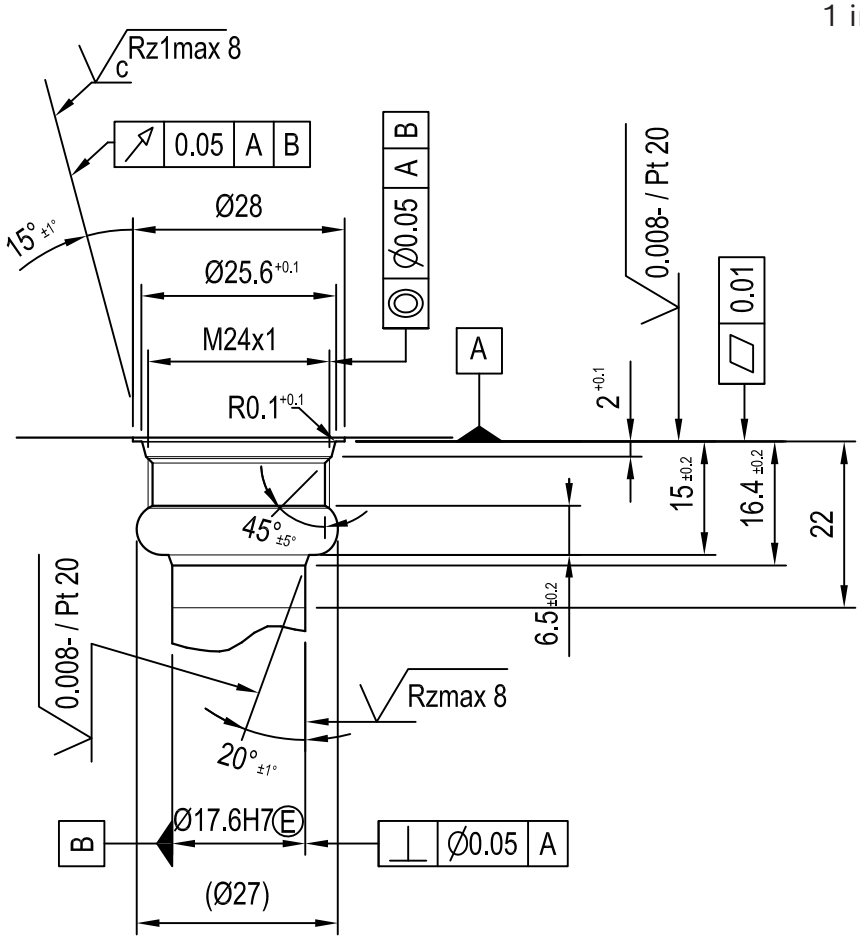

Note: For further details please consult factory

Special cavity FC

1 mm = 0.03937 in
1 in = 25.4 mm

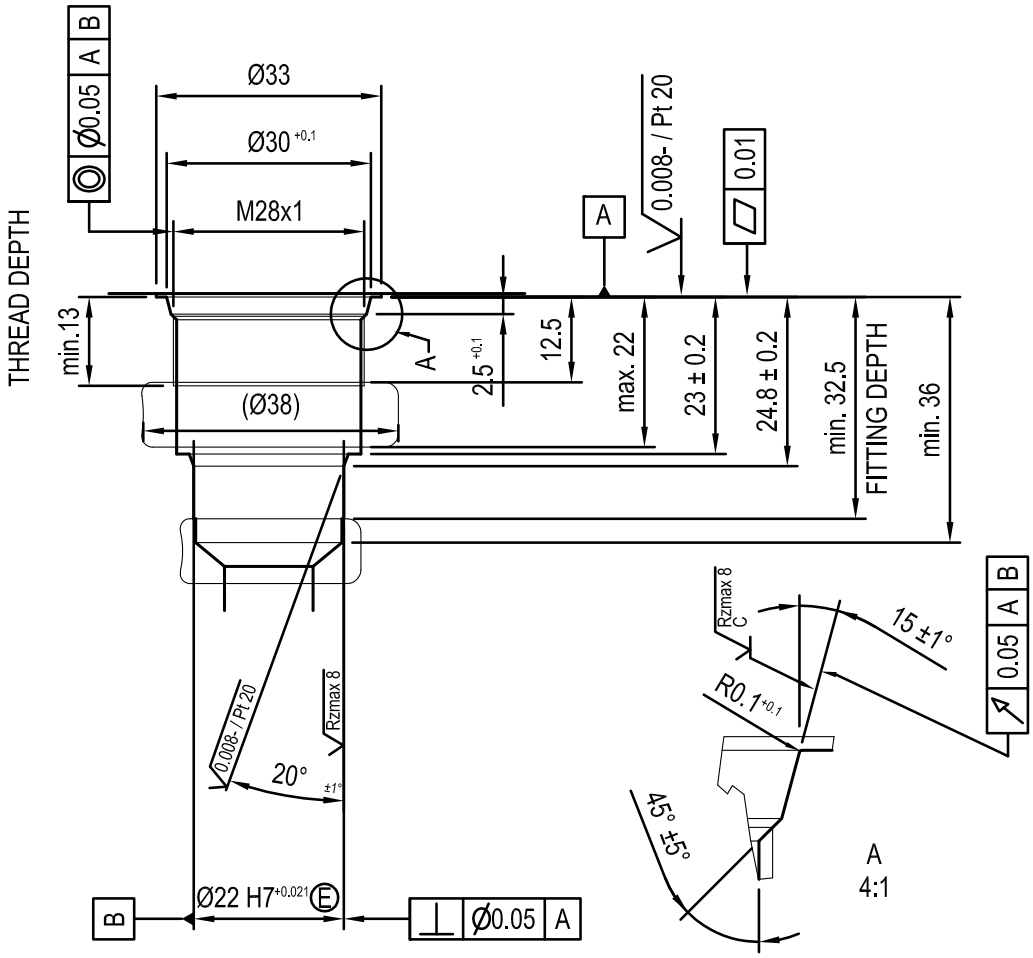

Note: For further details please consult factory

Special cavity LG

1 mm = 0.03937 in
1 in = 25.4 mm

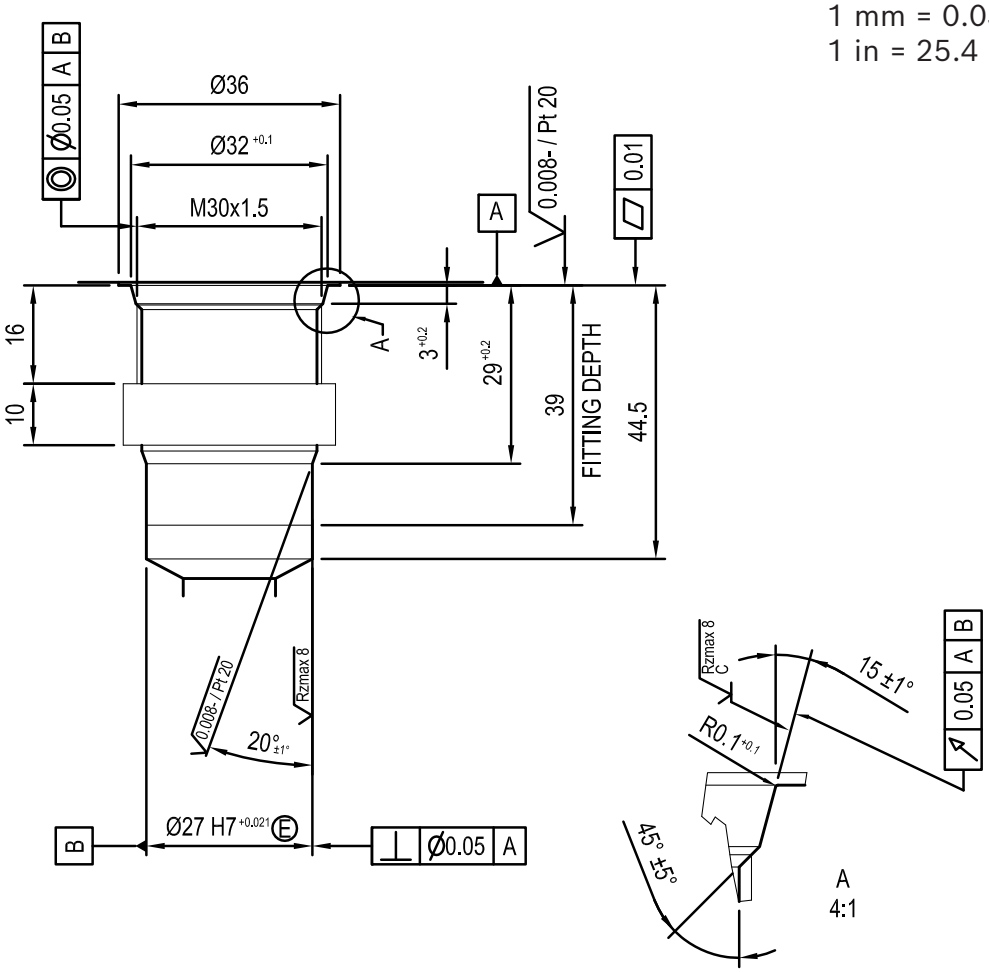

Note: For further details please consult factory

Special cavity CA-10A-5N (R/UNF-10-05-0-08)

1 mm = 0.03937 in
1 in = 25.4 mm

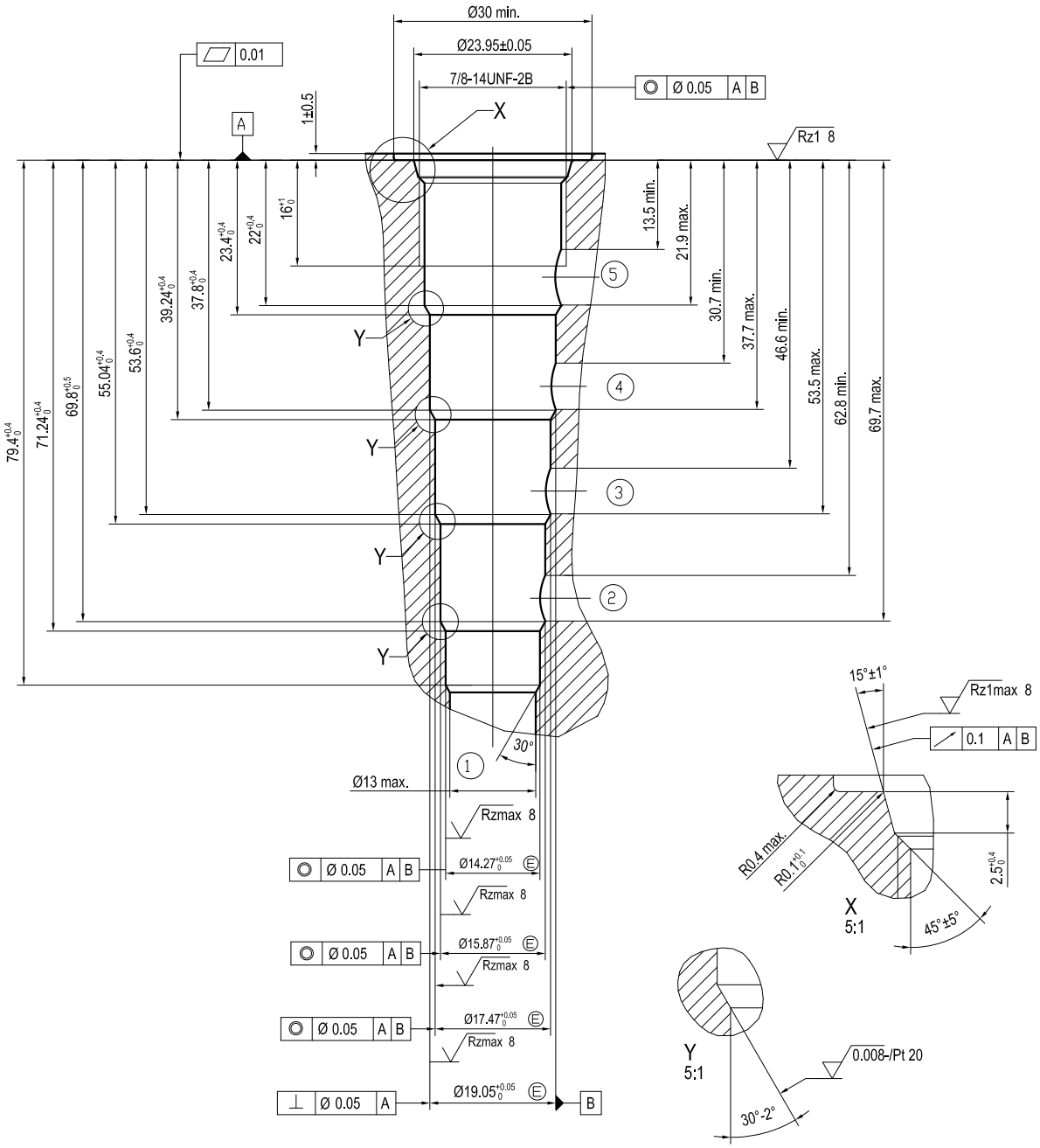

Note: For further details please consult factory

Special cavity Hydac 06020

1 mm = 0.03937 in
1 in = 25.4 mm

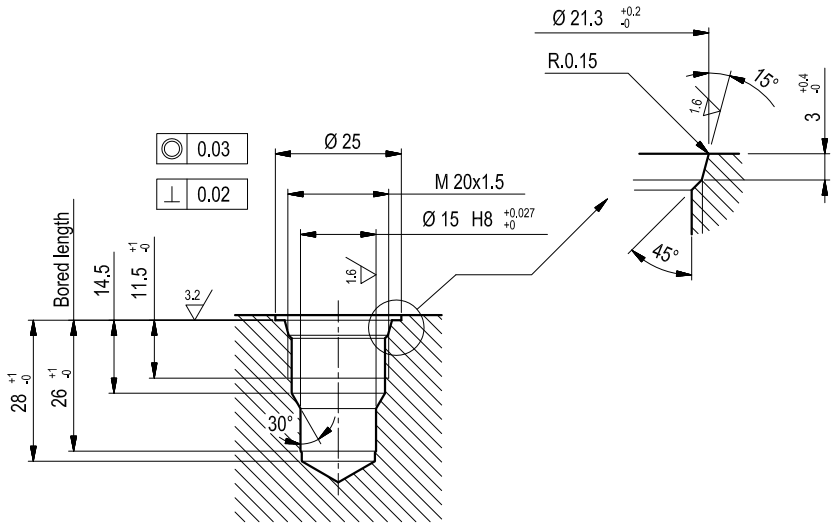

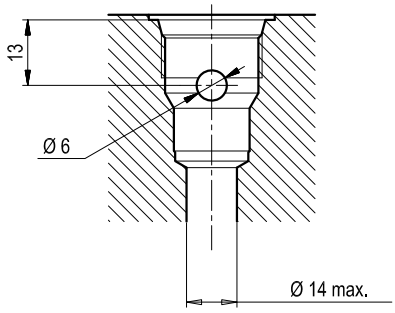

Note: For further details please consult factory

Special cavity 1004

1 mm = 0.03937 in
1 in = 25.4 mm

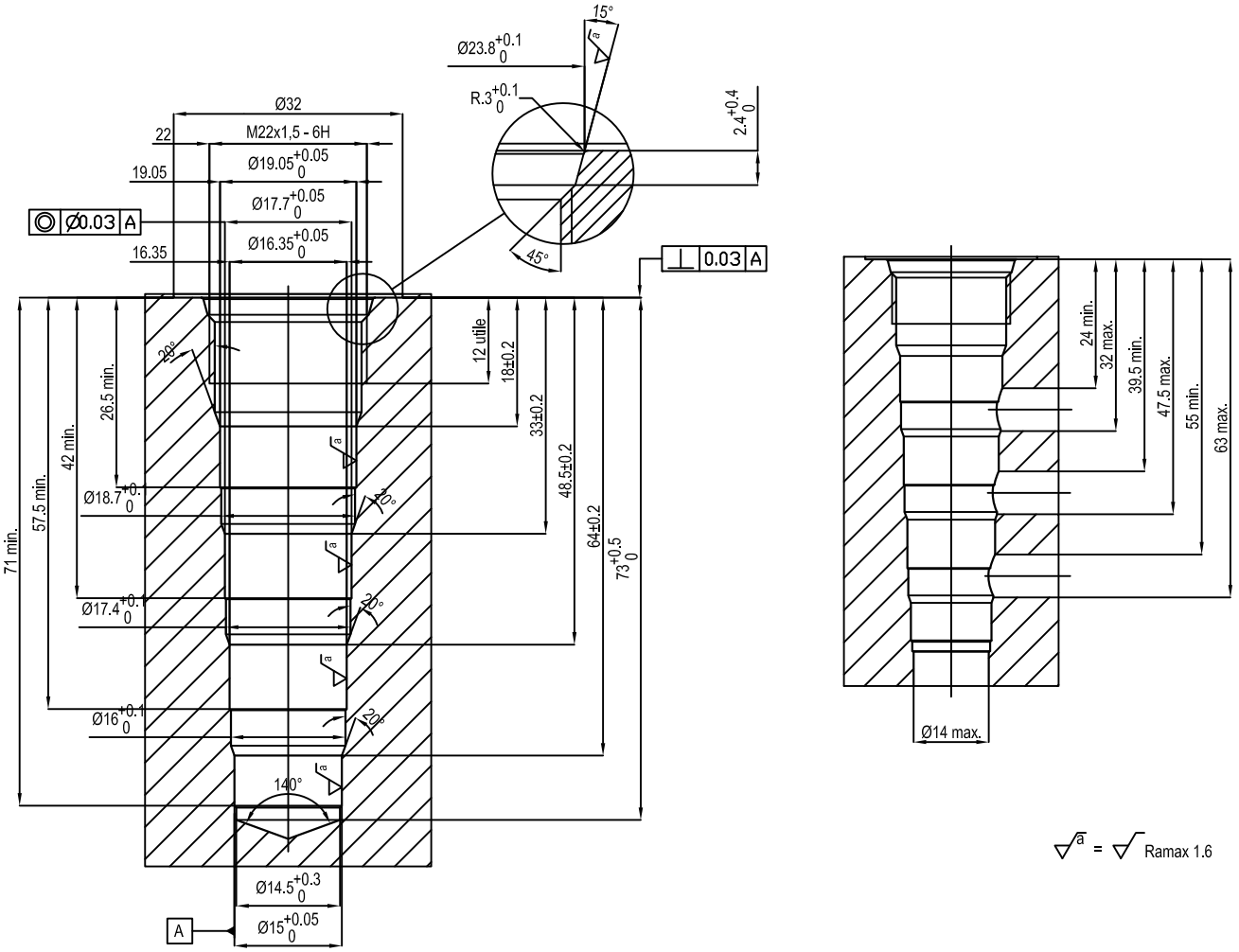

Note: For further details please consult factory

Special cavity R/MH2FR04K

1 mm = 0.03937 in
1 in = 25.4 mm

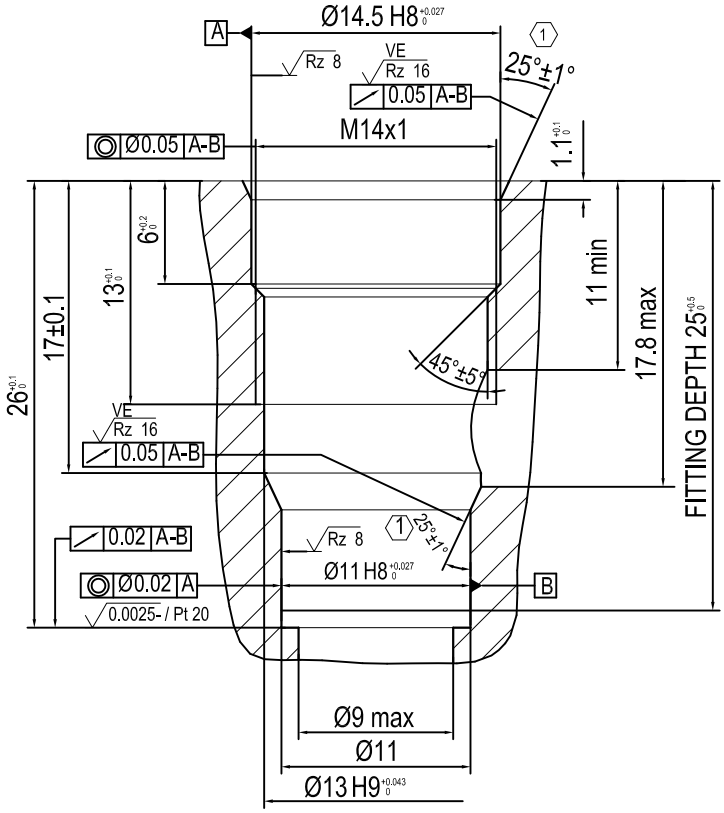

Note: For further details please consult factory

Special cavity R/LA

1 mm = 0.03937 in
1 in = 25.4 mm

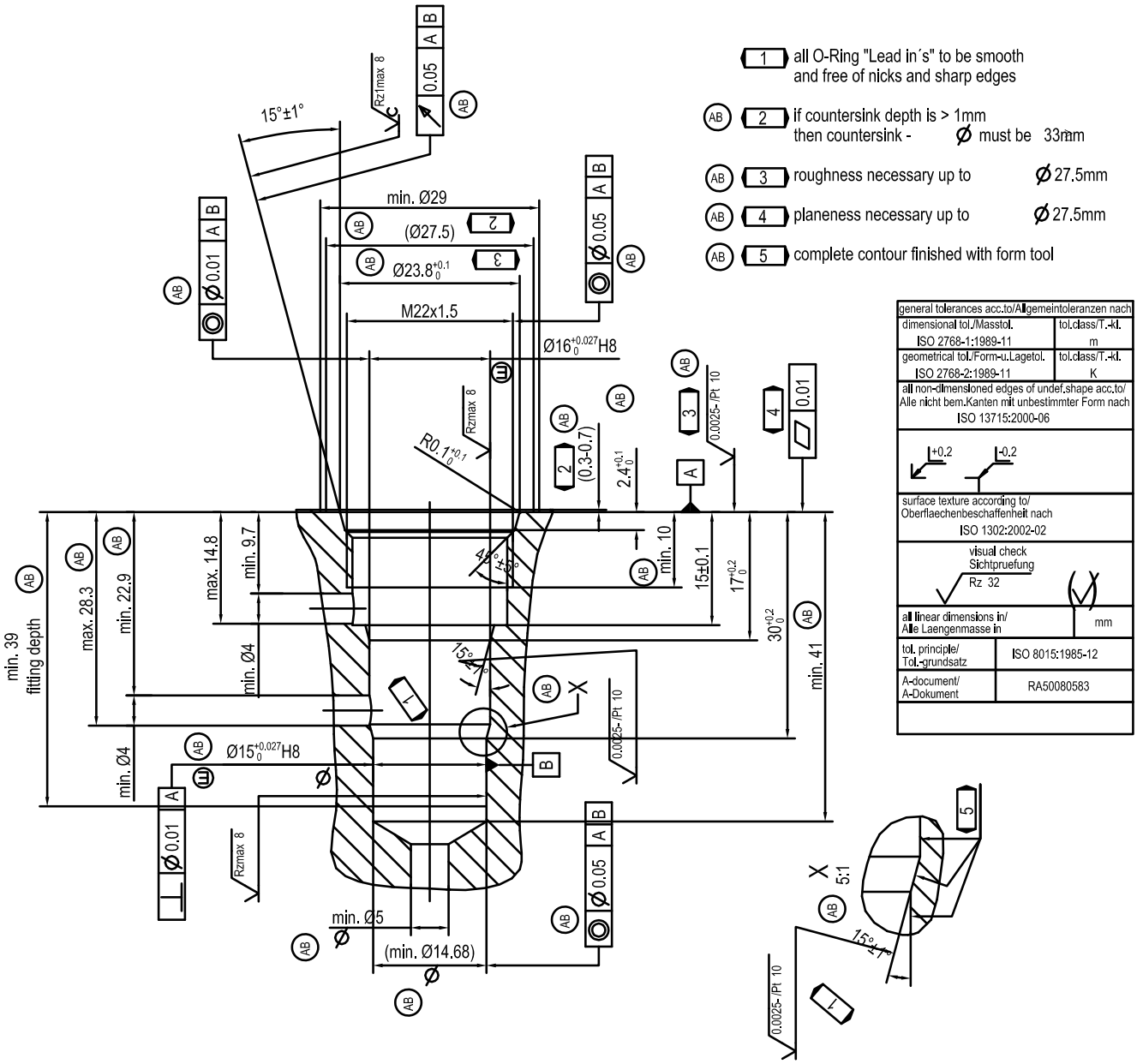

Special cavity YHC

1 mm = 0.03937 in
1 in = 25.4 mm

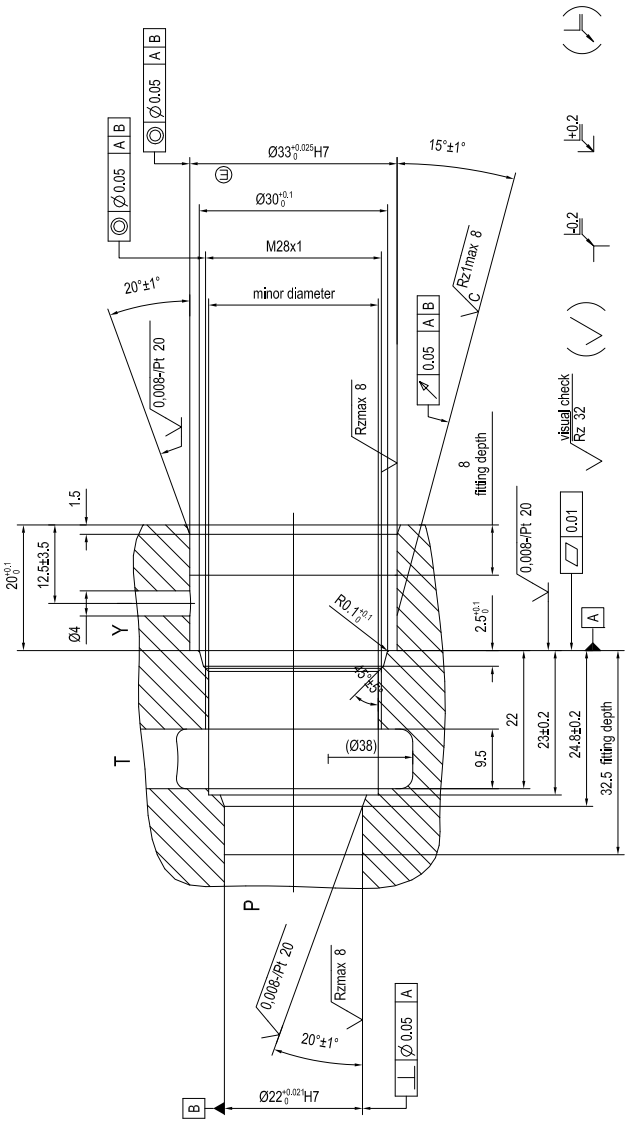

Note: For further details please consult factory

Special cavity YHK

1 mm = 0.03937 in
1 in = 25.4 mm

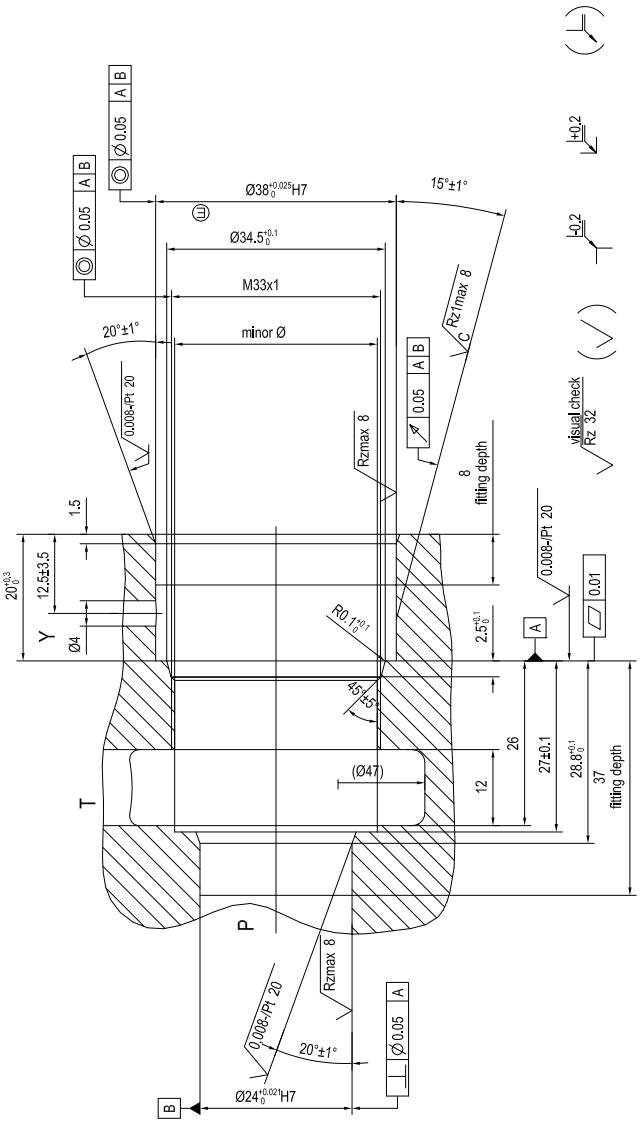

Note: For further details please consult factory

Special cavity FK

1 mm = 0.03937 in
1 in = 25.4 mm

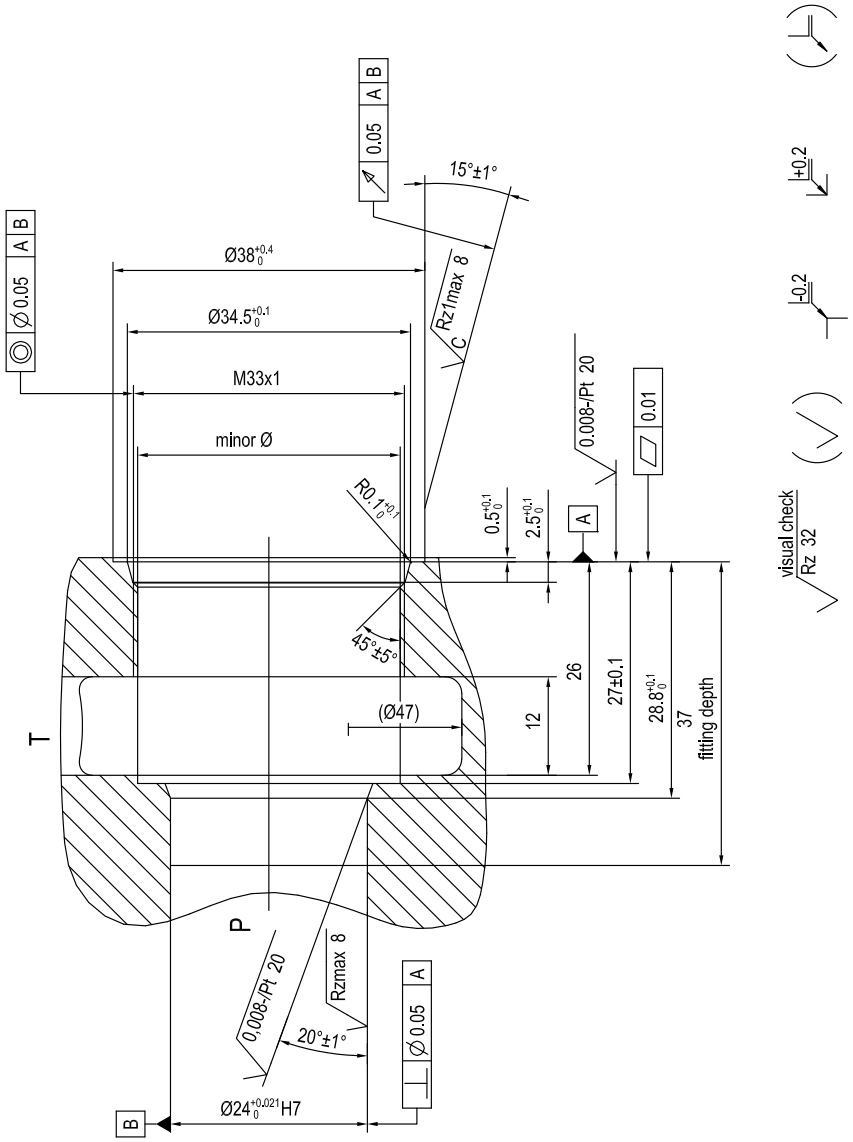

Note: For further details please consult factory

Special cavity R/T-08A

1 mm = 0.03937 in
1 in = 25.4 mm

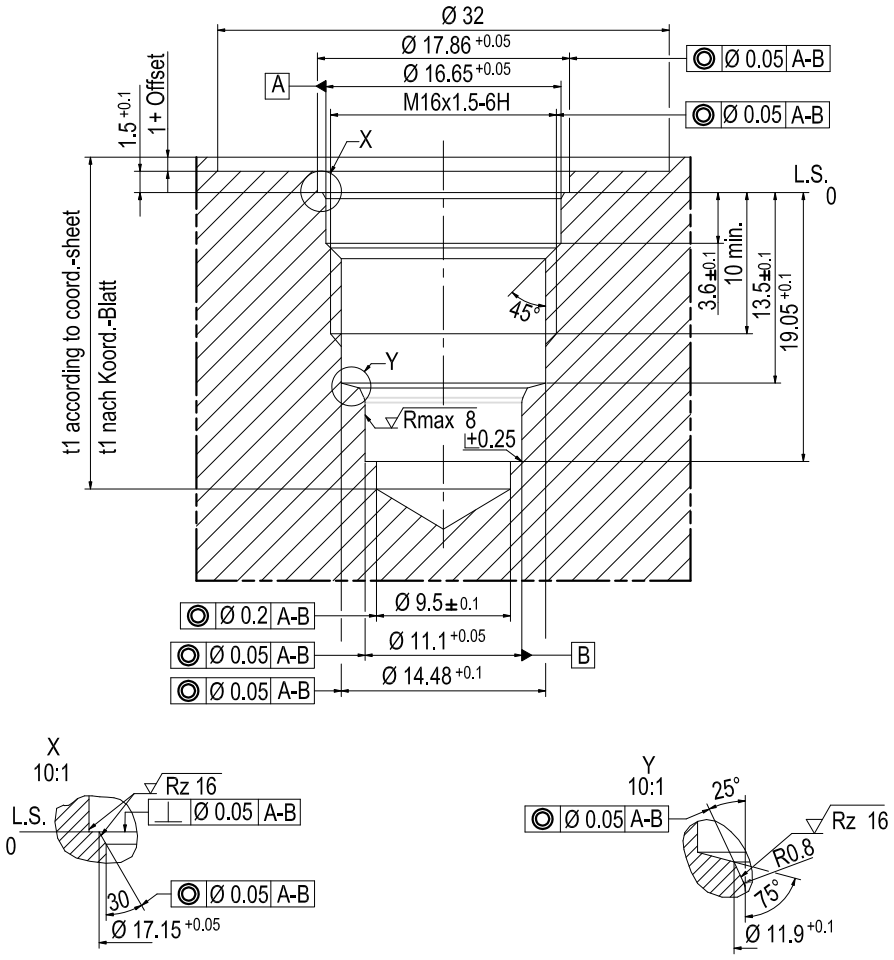

Note: For further details please consult factory

Special cavity LM

1 mm = 0.03937 in
1 in = 25.4 mm

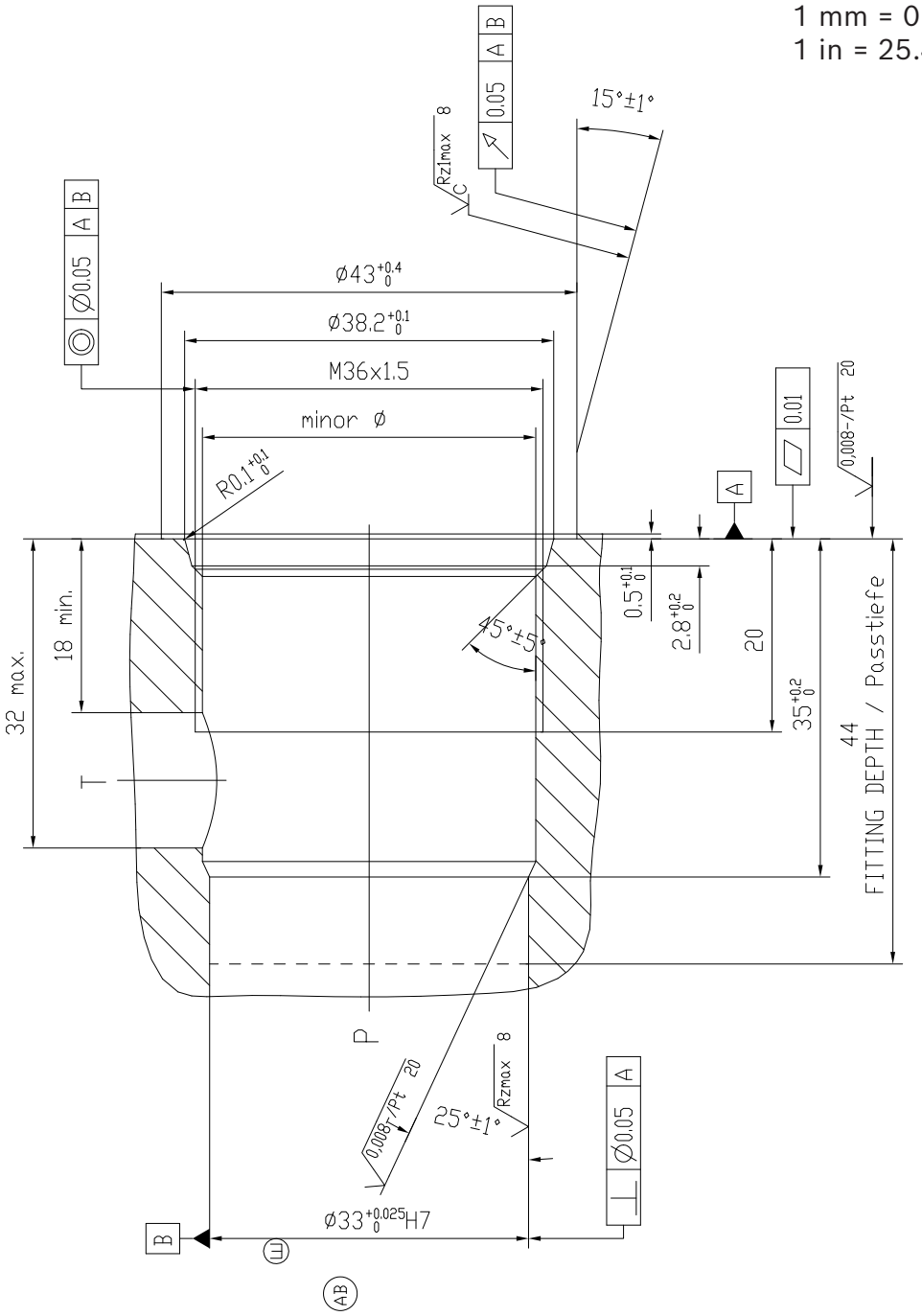

Note: For further details please consult factory

Special cavity 039-E

1 mm = 0.03937 in
1 in = 25.4 mm

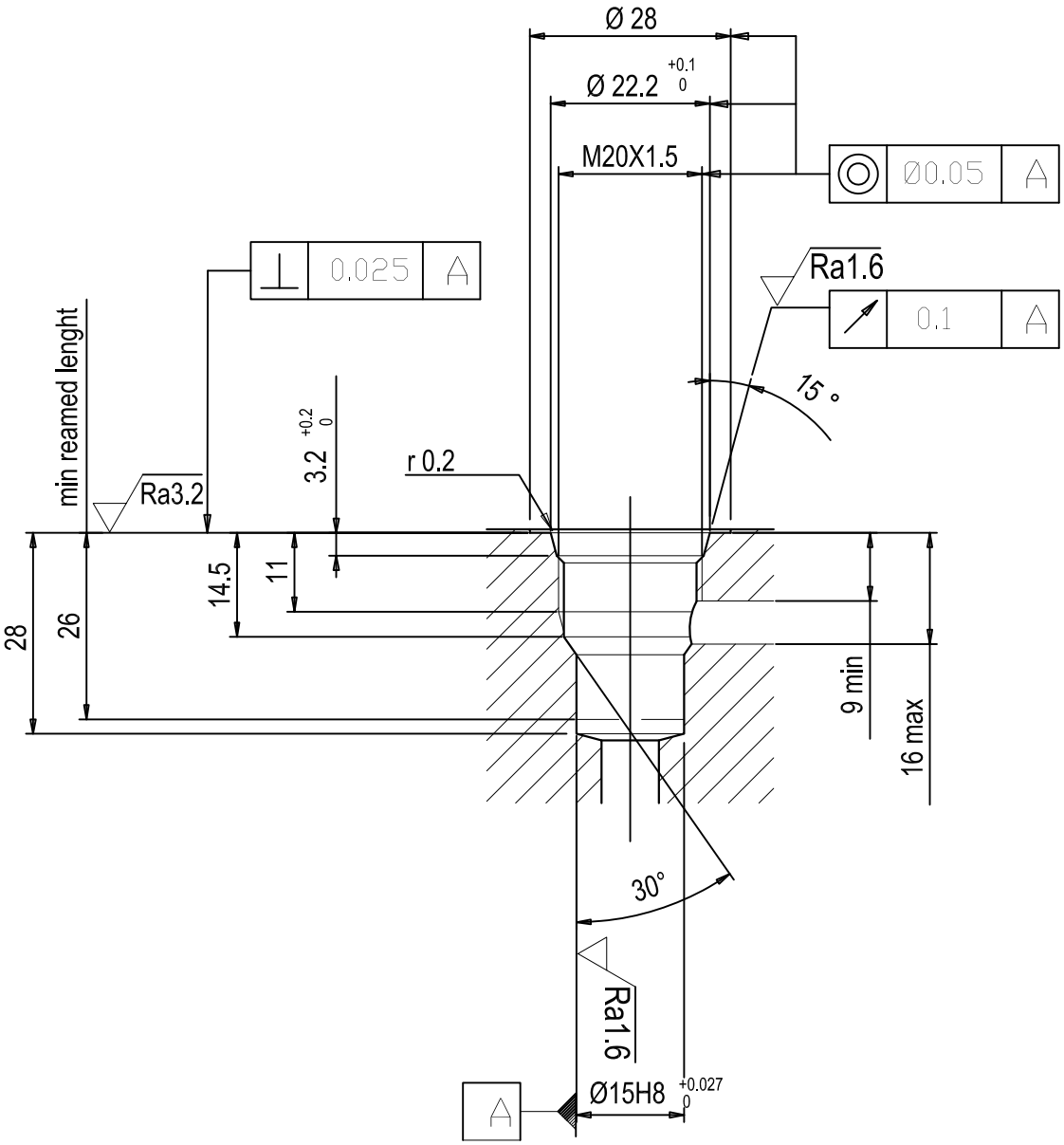

Note: For further details please consult factory

Special cavity 040-E

1 mm = 0.03937 in
1 in = 25.4 mm

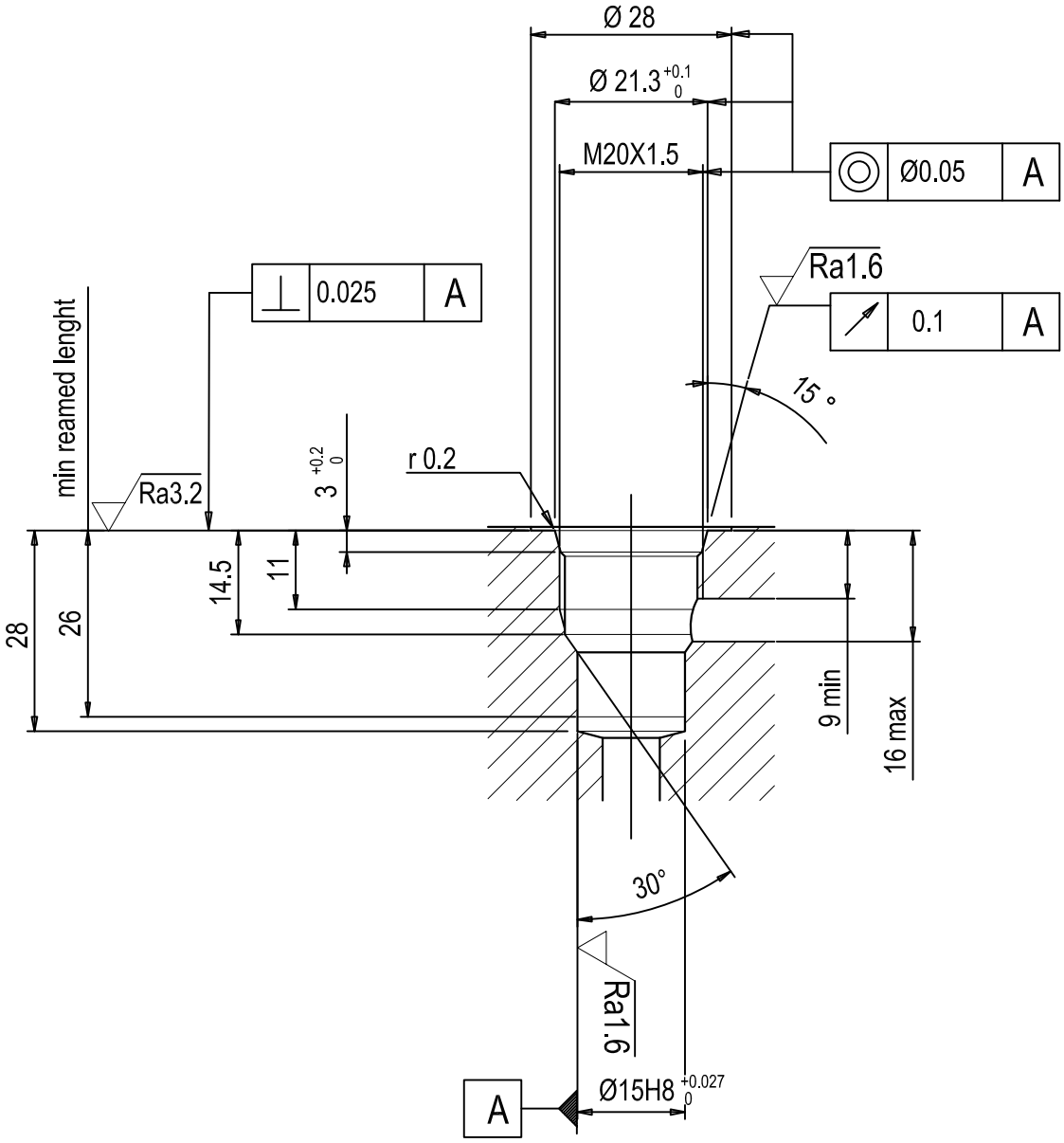

Note: For further details please consult factory

Bosch Rexroth Oil Control S.p.A.
Via Leonardo da Vinci 5
P.O. Box no. 5
41015 Nonantola – Modena, Italy
Tel. +39 059 887 611
Fax +39 059 547 848
compact-hydraulics-cv@boschrexroth.com
www.boschrexroth.com/compacthydraulics

© This document, as well as the data, specifications and other information set forth in it, are the exclusive property of Bosch Rexroth Oil Control S.p.a.. It may not be reproduced or given to third parties without its consent.

The data specified above only serve to describe the product. No statements concerning a certain condition or suitability for a certain application can be derived from our information. The information given does not release the user from the obligation of own judgment and verification. It must be remembered that our products are subject to a natural process of wear and aging.

Subject to change.